Pin Header 2.54mm(0.100")

GXCON

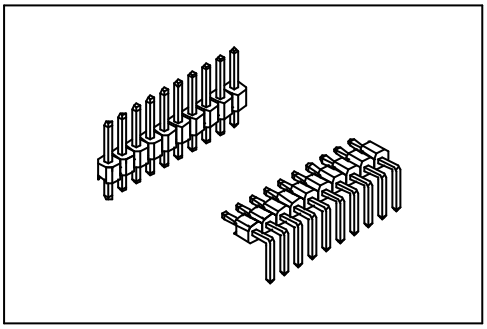

Material:

Housing: 30% Glass filled PBT UL94V-0
Contacts: Brass.
Plating: Gold plated over nickel.
Tin plated over nickel.

Electrical Characteristics:

Current Rating: 1 AMP.
Insulator Resistance: 5000MΩmin. at DC 500V
Contact Resistance: 20mΩmax. at DC 100mA
Operating Temperature: −55℃ ~+105℃

Features:

* Available in Straight and Right angle
* Side-to-side and end-to-end stackable.
* Custom design offered.

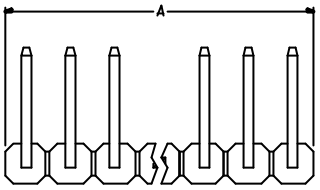

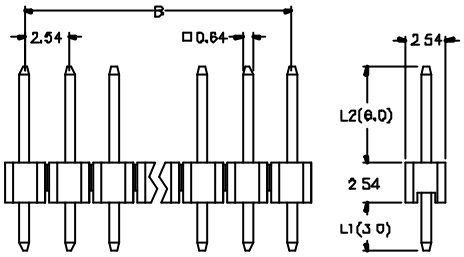

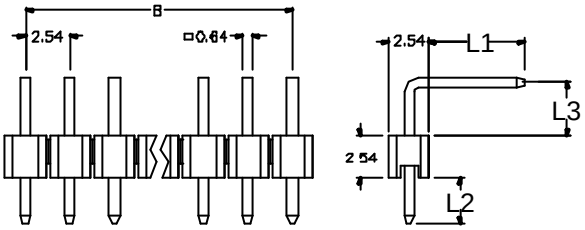

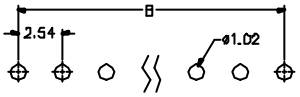

P.C. Board Layout

Position / Dimension	2 Thru 40
A	2.54 X No. of Positions
B	2.54 X No. of Positions −2.54

Ordering information

PH01−	1	40	1	1
Series	Single Row	No. of Pin Per Row	1: Gold Plated 2: Tin Plated	1: Straight 2: Right Angle

Custom Design: Straight (i.e. PH01-14011/L1/L2)
Right Angle (i.e. PH01-14012/L1/L2/L3)